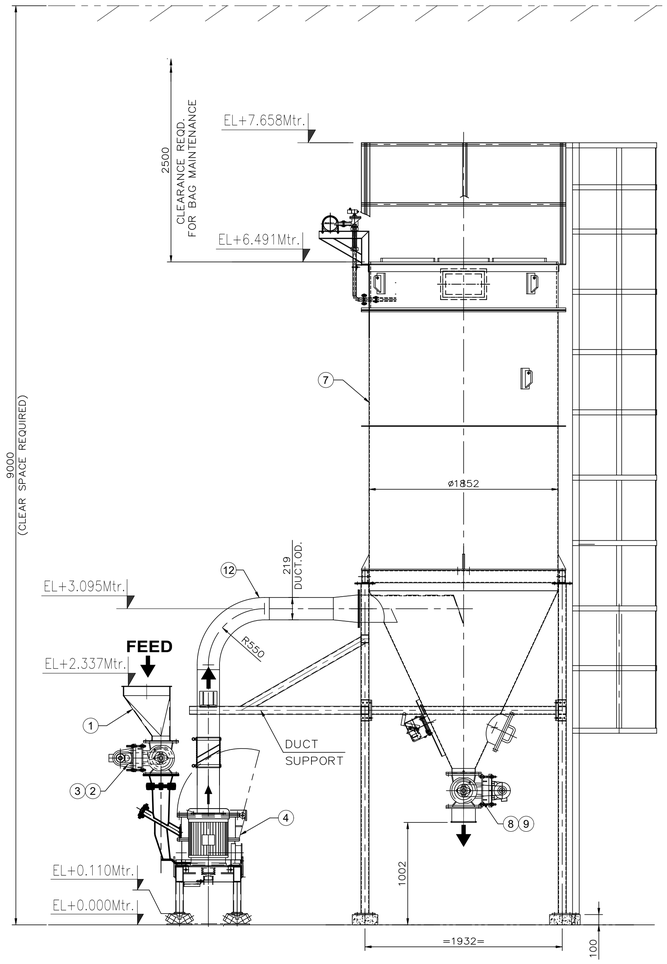

ELEVATION

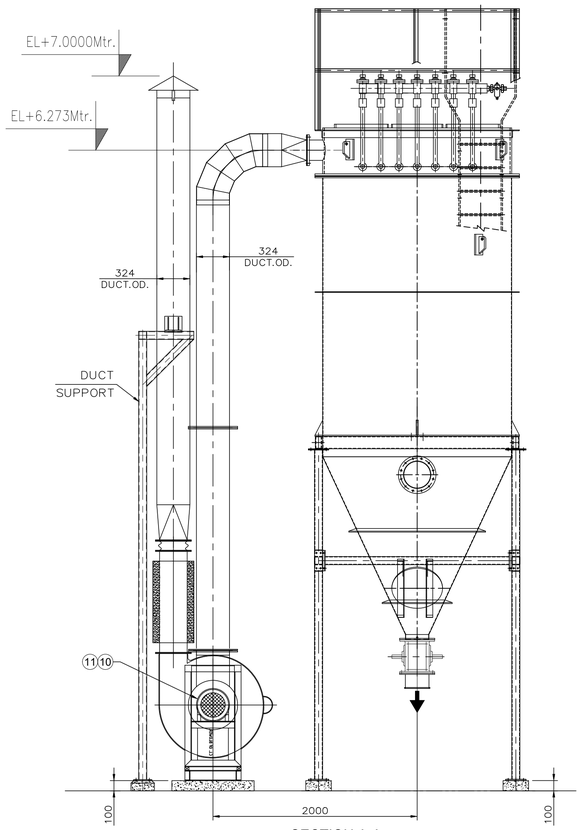

SECTION A-A

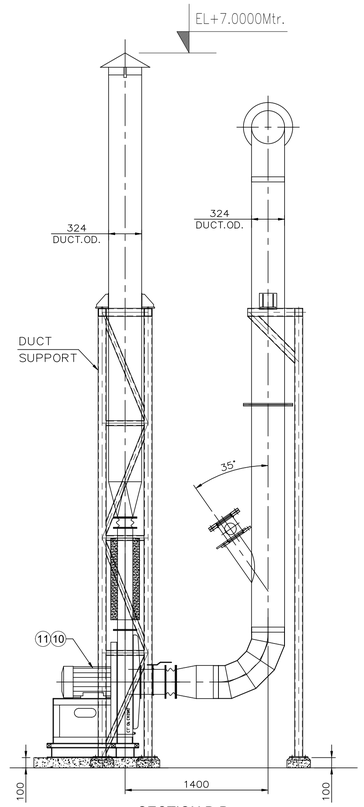

SECTION B-B

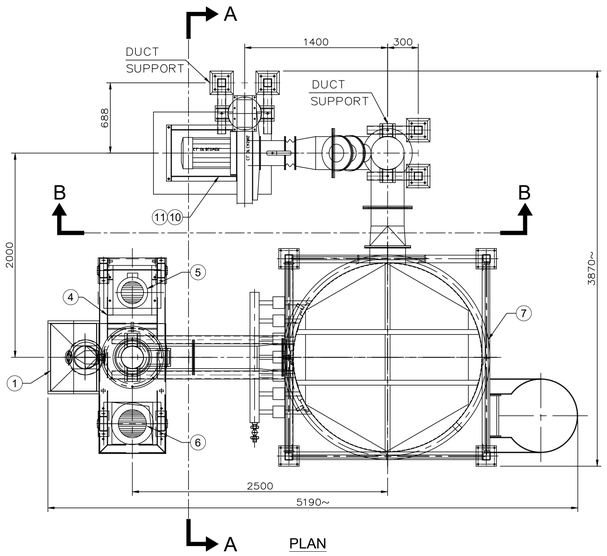

PLAN

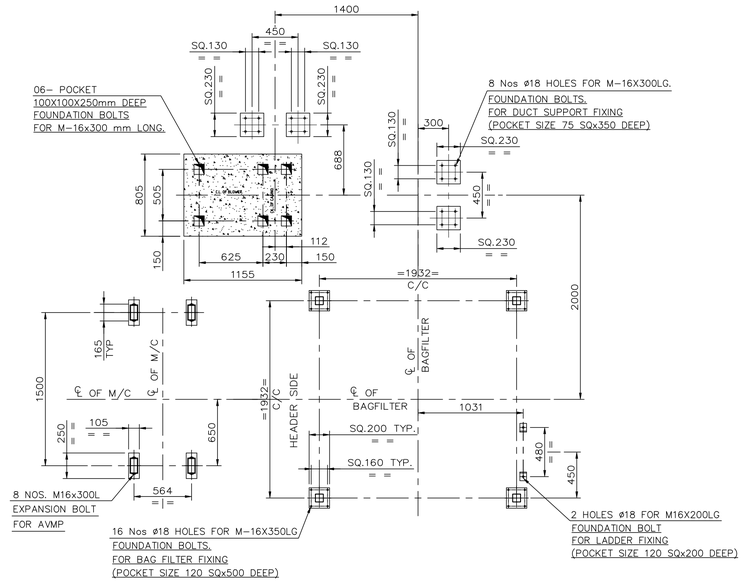

FOUNDATION PLAN @EL.+100 MM LVL.
(EXCEPT MILL)

DESIGN DATA-

MATERIAL	AGRO CHEMICAL
CAPACITY	250–300 Kg/Hr
FEED SIZE	SUGAR S30
FINAL PRODUCT SIZE	99% PASSING 45 MICRON
BULK DENSITY	400–500 kg/m3

EQUIPMENT	LOAD IN KG.	
	STATIC	OPERATING
30ACM	900	2250
BAG FILTER+RAL AL200	2500	3500
FAN	615	800

OPTION-1

NOTES:--

- # ALL DIMENSIONS ARE IN MM UNLESS NOTED.
- # DO NOT SCALE THE DRAWING.
- # IF IN DOUBT,PLEASE ASK.
- # ALL DUCTING TO BE SUPPORTED BY CLIENT SUITABLY AT SITE.
- * # COMPRESSED AIR REQD. 17NM^3/Hr CLEAN DRY & OIL FREE COMPRESSED TO 6TO 8kg/cm^2g TO BE ARRANGED BY CLIENT.
- # ALL MOTORS ARE SUITABLE TO 3Ph,415V ±10%,50Hz ±5% SUPPLY WITH IP-55 ENCLOSURE,F-CLASS INSULATION,45° AMBIENT
- # GASKET – WHITE NEOPRENE RUBBER FOOD GRADE
- # PAINT SPECIFICATION-COAT 1- EPOXY GREY EP8214 PRIMER W HARDENER COAT 2 – PU WHITE RAL9003 GL W HARDENER.

SR.No	PART No.	QTY	DESCRIPTION	MATERIAL	SIZE	REMARK
12		1	DUCTING	MS		
11		1	MOTOR FOR FAN(B-3 MOUNTING)	STD	25HP	
10		1	FAN WITH SILENCER	MS		
9		1	GEARED MOTOR FOR RAL(B-6 MOUNTING)	STD	0.5HP	
8		1	RAL BELOW BAG FILTER	CI/MS	AL-200	
7		1	BAG FILTER TRL	MS	49H-8 CYLTRL	
6		1	CLASSIFIER MOTOR (V-1 MOUNTING)	STD	7.5HP	
5		1	MAIN MOTOR (V1 MOUNTING)	STD	30HP	
4		1	MILL	CI/MS	30ACM	
3		1	GEARED MOTOR FOR RAL(B-6 MOUNTING)	STD	0.5HP	
2		1	RAL (FEED)	CI/MS	AL-200	
1		1	FEED HOPPER	MS		

CLIENT	- -
CONSULTANT	- -
RIECO'S S.O.No.	- -
CLIENT'S P.O.No.	- -

REV	ZONE	DATE	DESCRIPTION	DRAWN	CHECK

UNSPECIFIED DEVIATIONS LINEAR DIMENSION

BASIC SIZE RANGE	MACHINING	FABRICATION
0.5-3	± 0.05	± 0.2
3-6	± 0.05	± 0.3
6-30	± 0.1	± 0.5
30-120	± 0.15	± 0.8
120-400	± 0.2	± 1.2
400-1000	± 0.3	± 2
1000-2000	± 0.5	± 3
2000-4000	—	± 4

ROUGHNESS GRADE NO.	N12	N11	N10	N9	N8	N7	N6	N5	N4	N3	N2	N1
ROUGHNESS VALUE-RA µ m	50	25	12.5	6.3	3.2	1.6	0.8	0.4	0.2	0.1	0.05	0.025

ROUGHNESS SYMBOL

ALL DIMENSION ARE IN MM.
DEBUR CORNERS O.3x45°
UNSPECIFIED CHAMFERS 0.5x45°
DO NOT SCALE IF IN DOUBT, ASK.

PROPRIETARY AND CONFIDENTIAL THE INFORMATION CONTAINED IN THIS DRAWING IS THE SOLE PROPERTY OF **RIECO INDUSTRIES LTD.** ANY REPRODUCTION IN PART OR AS A WHOLE WITHOUT PERMISSION OF THE WRITTEN **RIECO INDUSTRIES LTD.** PROHIBITED.

RIECO **RIECO INDUSTRIES LTD.**
1162/2 SHIVAJINAGAR,BEHIND OBSERVATORY,PUNE-411 005 (INDIA)

TITLE **30 ACM PLANT LAYOUT**

	SIGN	DATE D	M	Y
DRAWN	SRK	05	11	2025
CHECKED	NSP	05	11	2025
APPROVED	NSP	05	11	2025

REFERENCE DRG. No.	SCALE	DRAWING No	REV.	SHEET
REPLACES DRG. No.	1:30	Axxxxxxxxxxxx	0	1 OF 1